PFXC90712
TWO HANDLE
WALL MOUNT FAUCET

Product Features

· Flow rate:1.75 GPM (6.6 L/min) at 60 PSI
· 1/2" IPS inlets
· 8" centers
· Soap dish
· Swivel spout

Codes and Certifications

NSF/ANSI/CAN 372
NSF/ANSI/CAN 61:Q≤1

LOW LEAD

PFXC90712

· Certified to ASME A112.18.1 / CSA B125.1
· cUPC/IAPMO listed
· Handle ADA compliant
· NSF/ANSI/CAN61: Q < 1

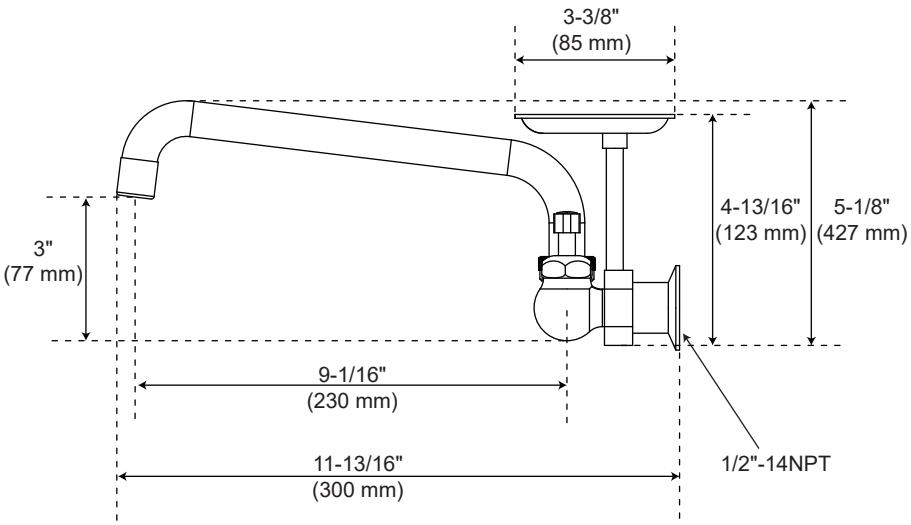

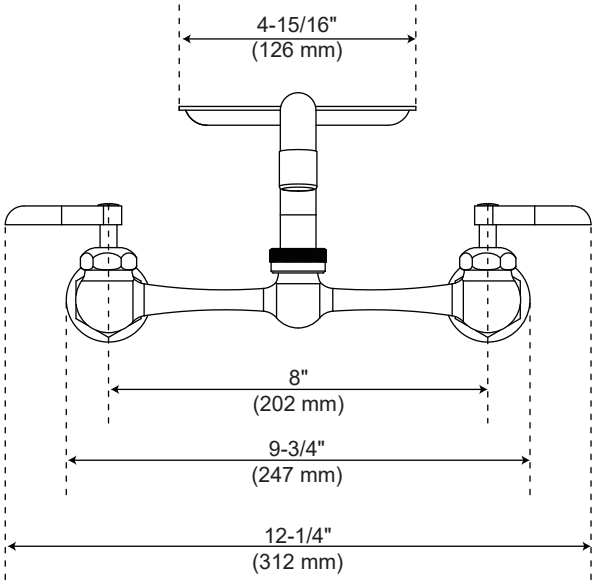

For detailed warranty information, visit **ferguson.com/proflo-faucet-warranty**.

©2026 Ferguson Enterprises, LLC. FG 01/2026-A